PRODUCED BY AN AUTODESK EDUCATIONAL PRODUCT

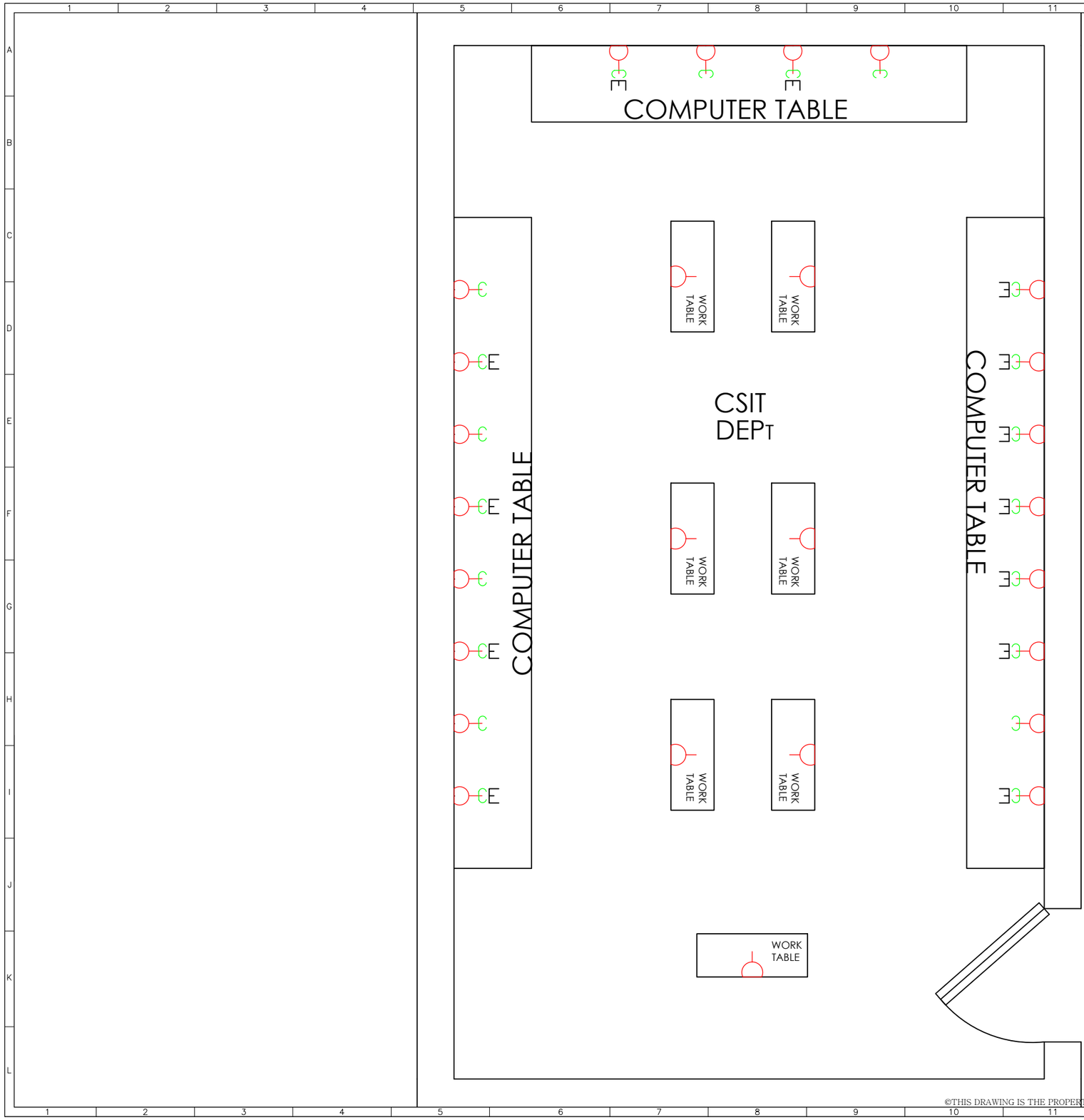

SL	SYMBOL	DESCRIPTION	QUANTITY
01		3 nos 6A Sockets controlled by 1 no.16A Switch (UPS Socket)	7 Nos
02		3 nos 6A Sockets controlled by 3 no.6A Switch (Existing)	13 Nos

GENERAL NOTES

FOR CONTRACTOR

FOR CONSULTANT

M.R. THAMPI
CHIEF CONSULTANT
FOR ANANTHAPURI CONSULTANTS

FOR CLIENT

PROJECT
CAPE KIDANGOOR

TITLE
MICROPROCESSOR LAB FIRST FLOOR CSIT DEPT PHYSICAL

DRAWING STATUS: GOOD FOR CONSTRUCTION

REV.	DATE	REMARKS
R0	-	

DESIGNED BY: VIGNESH	CHEKED BY: SHIBIN	APPROVED: MRT
PROJECT NO.	DWG NO.	DATE: 11.01.2016

ANANTHAPURI CONSULTANTS
ENGINEERING DESIGN CONSULTANTS
SERA-36, 2nd FLOOR, BEHIND CENTRAL STADIUM,
NEAR ADHYAPAKA BHAVAN,
THIRUVANANTHAPURAM - 1
PH: 0471 - 2321656/ananthapuriconsult@gmail.com

©THIS DRAWING IS THE PROPERTY OF ANANTHAPURI CONSULTANTS SHALL NOT BE REPRODUCED

PRODUCED BY AN AUTODESK EDUCATIONAL PRODUCT

PRODUCED BY AN AUTODESK EDUCATIONAL PRODUCT

PRODUCED BY AN AUTODESK EDUCATIONAL PRODUCT

PRODUCED BY AN AUTODESK EDUCATIONAL PRODUCT

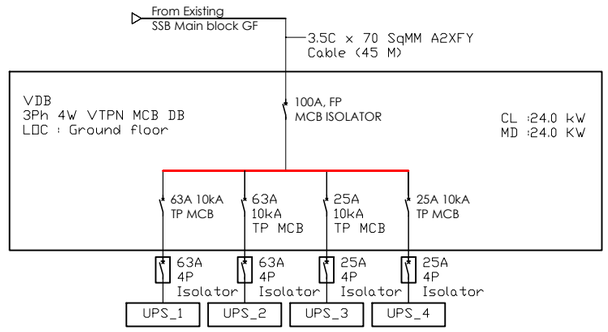

EQUIPMENT NO.		UPS_1	UPS_2	UPS_3	UPS_4
EQUIPMENT DESCRIPTION		10KVA UPS	10KVA UPS	5KVA UPS	5KVA UPS
CONNECTED LOAD(kW)		8	8	4	4
MAXIMUM DEMAND(kW)		8	8	4	4
SWITCHGEAR RATING(A)		63	63	25	25
BACK UP FUSE RATING(A)		63	63	25	25
POWER CABLE/ WIRES	SIZE IN SQ.MM	10	10	6	6
	NO. OF RUNS/CORES	4R	4R	4R	4R
	TYPE OF CABLE	Cu Wire	Cu Wire	Cu Wire	Cu Wire
	LENGTH IN METERS	30	50	75	75
SIZE OF EARTH COND. [Cu]		6 Sq mm Green Wire	6 Sq mm Green Wire	4 Sq mm Green Wire	4 Sq mm Green Wire
LOCATION		Ground floor	First floor	Drawing Room	Drawing Room
REF. DRAWING NO:		-	-	-	-
WIRING DETAILS					

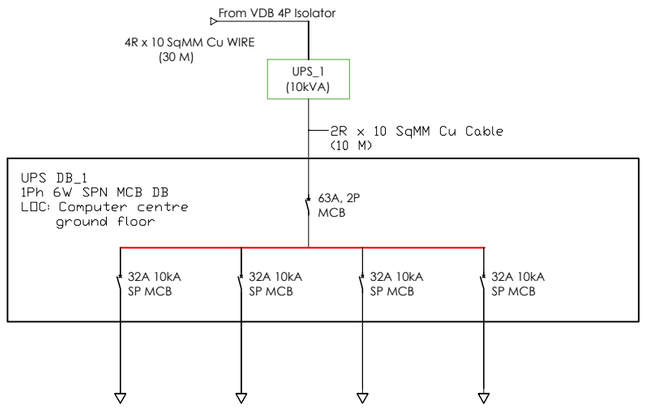

EQUIPMENT NO.		UPS DB 1	UPS DB 2	Spare	Spare
EQUIPMENT DESCRIPTION		1PH 12W	1PH 12W		
CONNECTED LOAD(kW)		2	2		
MAXIMUM DEMAND(kW)		2	2		
SWITCHGEAR RATING(A)		32	32		
BACK UP FUSE RATING(A)		32	32		
POWER CABLE/ WIRES	SIZE IN SQ.MM	6	6		
	NO. OF RUNS/CORES	2R	2R		
	TYPE OF CABLE	Cu Wire	Cu Wire		
	LENGTH IN METERS	5	5		
SIZE OF EARTH COND. [Cu]		4 Sqmm Green Wire	4 Sqmm Green Wire		
LOCATION		Existing DB Ground floor	Existing DB Ground Floor		
REF. DRAWING NO:					
WIRING DETAILS					

SL	SYMBOL	DESCRIPTION	QUANTITY

GENERAL NOTES

FOR CONTRACTOR

FOR CONSULTANT

M.R. THAMPI
CHIEF CONSULTANT
FOR ANANTHAPURI CONSULTANTS

FOR CLIENT

PROJECT
CAPE KIDANGOOR

TITLE
VDB & UPS DB MAIN BLOCK GROUND FLOOR

DRAWING STATUS: GOOD FOR CONSTRUCTION

REV.	DATE	REMARKS
R0	-	

DESIGNED BY: VIGNESH	CHEKED BY: SHIBIN	APPROVED: MRT
PROJECT NO.	DWG NO.	DATE: 11.01.2016

ANANTHAPURI CONSULTANTS
ENGINEERING DESIGN CONSULTANTS
SERA-36, 2nd FLOOR, BEHIND CENTRAL STADIUM,
NEAR ADHYAPAKA BHAVAN,
THIRUVANANTHAPURAM - 1
PH: 0471 - 2321656/ananthapuriconsult@gmail.com

©THIS DRAWING IS THE PROPERTY OF ANANTHAPURI CONSULTANTS SHALL NOT BE REPRODUCED

PRODUCED BY AN AUTODESK EDUCATIONAL PRODUCT

PRODUCED BY AN AUTODESK EDUCATIONAL PRODUCT

PRODUCED BY AN AUTODESK EDUCATIONAL PRODUCT

PRODUCED BY AN AUTODESK EDUCATIONAL PRODUCT

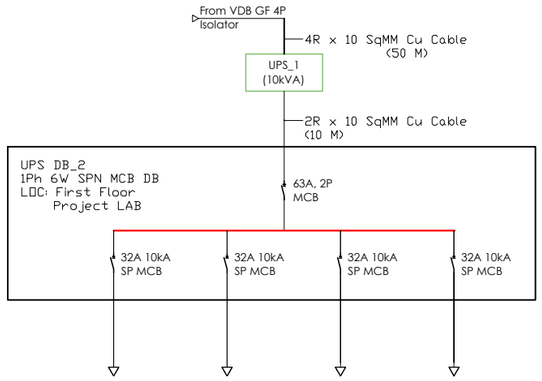

EQUIPMENT NO.		UPS DB A	UPS DB B	Spare	Spare
EQUIPMENT DESCRIPTION		1PH 12W	1PH 12W		
CONNECTED LOAD(kW)		5	5		
MAXIMUM DEMAND(kW)		5	5		
SWITCHGEAR RATING(A)		32	32		
BACK UP FUSE RATING(A)		32	32		
POWER CABLE/ WIRES	SIZE IN SQ.MM	6	6		
	NO. OF RUNS/CORES	2R	2R		
	TYPE OF CABLE	Cu Wire	Cu Wire		
	LENGTH IN METERS	15	15		
SIZE OF EARTH COND. [Cu]		4 Sq mm Green Wire	4 Sq mm Green Wire		
LOCATION		Existing DB first floor	Existing DB First floor		
REF. DRAWING NO:					
WIRING DETAILS					

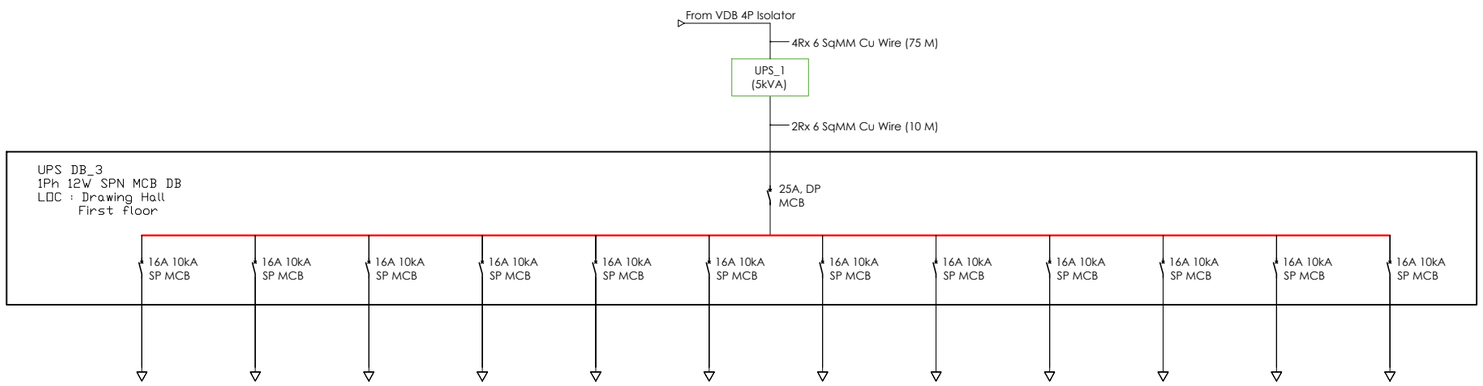

EQUIPMENT NO.		COMPUTER POINTS	SPARE & DUMMY
EQUIPMENT DESCRIPTION			
CONNECTED LOAD(kW)			
MAXIMUM DEMAND(kW)			
SWITCHGEAR RATING(A)			
BACK UP FUSE RATING(A)			
POWER CABLE/ WIRES	SIZE IN SQ.MM		
	NO. OF RUNS/CORES		
	TYPE OF CABLE		
	LENGTH IN METERS		
SIZE OF EARTH COND. [Cu]			
LOCATION			
REF. DRAWING NO:			
WIRING DETAILS		COMPUTER POINTS WIRED WITH 2x2.5 SQ MM PVC INSULATED FLRS CU WIRE & EARTHING WITH 1x1.5 SQ MM PVC INSULATED GREEN CU WIRE.	

SL	SYMBOL	DESCRIPTION	QUANTITY

GENERAL NOTES

FOR CONTRACTOR

FOR CONSULTANT

M.R. THAMPI
CHIEF CONSULTANT
FOR ANANTHAPURI CONSULTANTS

FOR CLIENT

PROJECT
CAPE KIDANGOOR

TITLE
PROJECT LAB & M.TECH RESEARCH LAB FIRST FLOOR

DRAWING STATUS: GOOD FOR CONSTRUCTION

REV.	DATE	REMARKS
R0	-	

DESIGNED BY: VIGNESH	CHEKED BY: SHIBIN	APPROVED: MRT
PROJECT NO.	DWG NO.	DATE: 11.01.2016

ANANTHAPURI CONSULTANTS
ENGINEERING DESIGN CONSULTANTS
SERA-36, 2nd FLOOR, BEHIND CENTRAL STADIUM,
NEAR ADHYAPAKA BHAVAN,
THIRUVANANTHAPURAM - 1
PH: 0471 - 2321656/ananthapuriconsult@gmail.com

©THIS DRAWING IS THE PROPERTY OF ANANTHAPURI CONSULTANTS SHALL NOT BE REPRODUCED

PRODUCED BY AN AUTODESK EDUCATIONAL PRODUCT
PRODUCED BY AN AUTODESK EDUCATIONAL PRODUCT
PRODUCED BY AN AUTODESK EDUCATIONAL PRODUCT

PRODUCED BY AN AUTODESK EDUCATIONAL PRODUCT

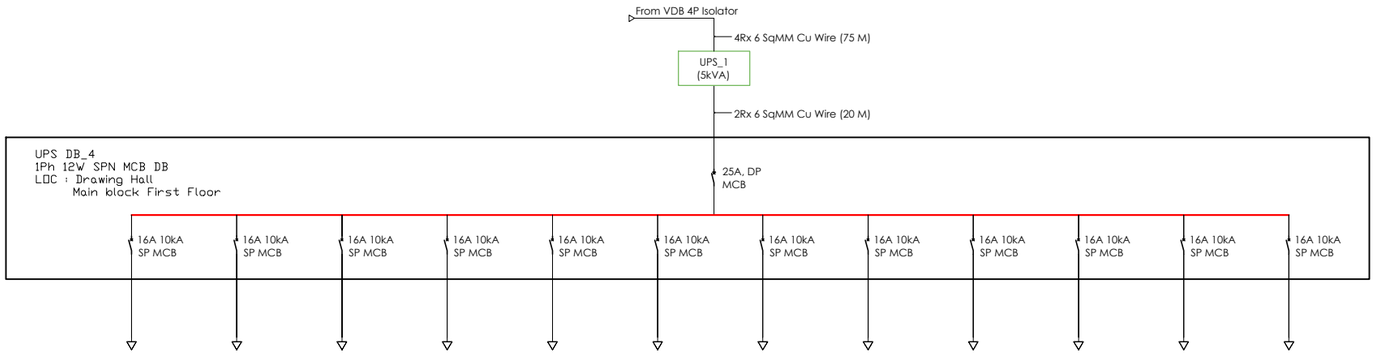

EQUIPMENT NO.		COMPUTER POINTS	SPARE & DUMMY
EQUIPMENT DESCRIPTION			
CONNECTED LOAD(kW)			
MAXIMUM DEMAND(kW)			
SWITCHGEAR RATING(A)			
BACK UP FUSE RATING(A)			
POWER CABLE/ WIRES	SIZE IN SQ.MM		
	NO. OF RUNS/CORES		
	TYPE OF CABLE		
	LENGTH IN METERS		
SIZE OF EARTH COND. [Cu]			
LOCATION			
REF. DRAWING NO:			
WIRING DETAILS		COMPUTER POINTS WIRED WITH 2x2.5 SQ MM PVC INSULATED FLRS CU WIRE & EARTHING WITH 1x1.5 SQ MM PVC INSULATED GREEN CU WIRE.	

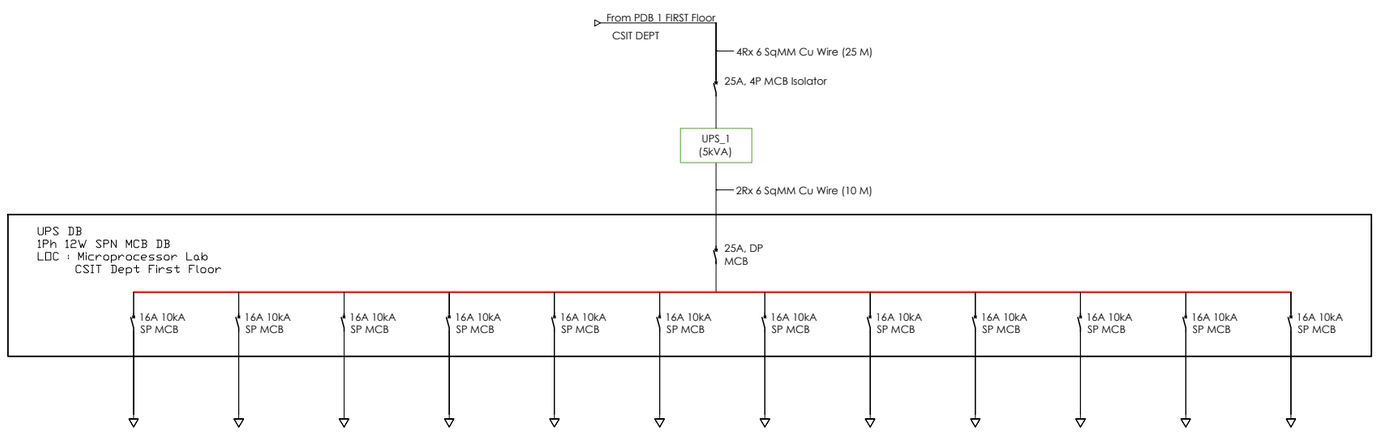

EQUIPMENT NO.		COMPUTER POINTS	SPARE & DUMMY
EQUIPMENT DESCRIPTION			
CONNECTED LOAD(kW)			
MAXIMUM DEMAND(kW)			
SWITCHGEAR RATING(A)			
BACK UP FUSE RATING(A)			
POWER CABLE/ WIRES	SIZE IN SQ.MM		
	NO. OF RUNS/CORES		
	TYPE OF CABLE		
	LENGTH IN METERS		
SIZE OF EARTH COND. [Cu]			
LOCATION			
REF. DRAWING NO:			
WIRING DETAILS		COMPUTER POINTS & POWER POINT WIRED WITH 2x2.5 SQ MM PVC INSULATED FLRS CU WIRE & EARTHING WITH 1x1.5 SQ MM PVC INSULATED GREEN CU WIRE.	

SL	SYMBOL	DESCRIPTION	QUANTITY

GENERAL NOTES

FOR CONTRACTOR

FOR CONSULTANT

M.R. THAMPI
CHIEF CONSULTANT
FOR ANANTHAPURI CONSULTANTS

FOR CLIENT

PROJECT
CAPE KIDANGOOR

TITLE
MICROPROCESSOR LAB & M.Tech RESEARCH LAB

DRAWING STATUS: GOOD FOR CONSTRUCTION

REV.	DATE	REMARKS
R0	-	

DESIGNED BY: VIGNESH	CHEKED BY: SHIBIN	APPROVED: MRT
PROJECT NO.	DWG NO.	DATE: 11.01.2016

ANANTHAPURI CONSULTANTS
ENGINEERING DESIGN CONSULTANTS
SERA-36, 2nd FLOOR, BEHIND CENTRAL STADIUM,
NEAR ADHYAPAKA BHAVAN,
THIRUVANANTHAPURAM - 1
PH: 0471 - 2321656/ananthapuriconsult@gmail.com

©THIS DRAWING IS THE PROPERTY OF ANANTHAPURI CONSULTANTS SHALL NOT BE REPRODUCED

PRODUCED BY AN AUTODESK EDUCATIONAL PRODUCT
PRODUCED BY AN AUTODESK EDUCATIONAL PRODUCT
PRODUCED BY AN AUTODESK EDUCATIONAL PRODUCT